Electrolux PROFESSIONAL

Modular Cooking Range Line 900XP One Well Electric Fryer 18 liter

ITEM #

MODEL #

NAME #

SIS #

AIA #



391094 (E9FRED1HF0)	18-lt electric Fryer with 1 well (internal heating elements), 2 half size baskets and lid included
391178 (E9FRED1HFN)	18-lt electric Fryer with 1 well (internal heating elements), 2 half size baskets and lid included

Short Form Specification

Item No.

High efficiency tilting incoloy armoured heating elements (16.5kW) placed inside the well. Deep drawn well. Oil drains through a tap into a container positioned under the well. Height adjustable feet in stainless steel. Exterior panels in stainless steel. Worktop in 20/10, stainless steel. Righ-angled side edges eliminate gaps and possible dirt traps between units.

APPROVAL:

Main Features

- Thermostatic regulation of oil temperature up to a maximum of 185 °C.
- Overheat protection thermostat as standard on all units.
- Oil drains through a tap into a drainage container positioned under the well.
- All major compartments located in front of unit for ease of maintenance.
- The special design of the control knob system guarantees against water infiltration.
- Unit delivered with four 50 mm legs in stainless steel as standard (all round Stainless steel kick plates as option).
- Supplied as standard with 2 half size baskets and 1 right side door for cupboard.
- Incoloy armoured heating elements located inside the well can be lifted up for easier cleaning.
- Optional portable oil quality monitoring tool (code 9B8081) for efficient oil management.

Construction

- Unit is 930 mm deep to give a larger working surface area.
- All exterior panels in Stainless Steel with Scotch Brite finishing.
- Model has right-angled side edges to allow flush fitting joints between units, eliminating gaps and possible dirt traps.
- Interior of well with rounded corners for ease of cleaning.
- IPX5 water resistance certification.

Included Accessories

- 1 of Door for open base cupboard — PNC 206350
- 1 of 2 half size baskets for 15lt OptiOil and 18/23lt fryers — PNC 927223

Optional Accessories

- Junction sealing kit — PNC 206086 ❑
- Flanged feet kit — PNC 206136 ❑
- Frontal kicking strip for concrete installation, 400mm — PNC 206147 ❑
- Frontal kicking strip for concrete installation, 800mm — PNC 206148 ❑
- Frontal kicking strip for concrete installation, 1000mm — PNC 206150 ❑
- Frontal kicking strip for concrete installation, 1200mm — PNC 206151 ❑
- Frontal kicking strip for concrete installation, 1600mm — PNC 206152 ❑

• Pair of side kicking strips for concrete installation	PNC 206157	❑
• Frontal kicking strip, 400mm (not for refr-freezer base)	PNC 206175	❑
• Frontal kicking strip, 800mm (not for refr-freezer base)	PNC 206176	❑
• Frontal kicking strip, 1000mm (not for refr-freezer base)	PNC 206177	❑
• Frontal kicking strip, 1200mm (not for refr-freezer base)	PNC 206178	❑
• Frontal kicking strip, 1600mm (not for refr-freezer base)	PNC 206179	❑
• Pair of side kicking strips (not for refr-freezer base)	PNC 206180	❑
• 2 panels for service duct for single installation	PNC 206181	❑
• 2 panels for service duct for back to back installation	PNC 206202	❑
• Kit 4 feet for concrete installation (not for 900 line free standing grill)	PNC 206210	❑
• Chimney upstand, 400mm	PNC 206303	❑
• Back handrail 800 mm	PNC 206308	❑
• Back handrail 1200 mm	PNC 206309	❑
• Door for open base cupboard	PNC 206350	❑
• Base support for feet or wheels - 400mm (700/900)	PNC 206366	❑
• Base support for feet or wheels - 800mm (700/900)	PNC 206367	❑
• Base support for feet or wheels - 1200mm (700/900)	PNC 206368	❑
• Base support for feet or wheels - 1600mm (700/900)	PNC 206369	❑
• Base support for feet or wheels - 2000mm (700/900)	PNC 206370	❑
• Rear paneling - 600mm (700/900XP)	PNC 206373	❑
• Rear paneling - 800mm (700/900)	PNC 206374	❑
• Rear paneling - 1000mm (700/900)	PNC 206375	❑
• Rear paneling - 1200mm (700/900)	PNC 206376	❑
• Base support for feet or wheels - 600mm (700/900)	PNC 206431	❑
• 2 side covering panels for free standing appliances	PNC 216134	❑
• 2 half baskets for 18lt fryers with front hook	PNC 927200	❑
• 1 full basket for 18lt fryers with front hook	PNC 927201	❑
• 2 half size baskets for 15lt OptiOil and 18/23lt fryers	PNC 927223	❑
• 1 full size basket for 15lt OptiOil and 18/23lt fryers	PNC 927226	❑

The company reserves the right to make modifications to the products without prior notice. All information correct at time of printing.

Modular Cooking Range Line 900XP One Well Electric Fryer 18 liter

Front

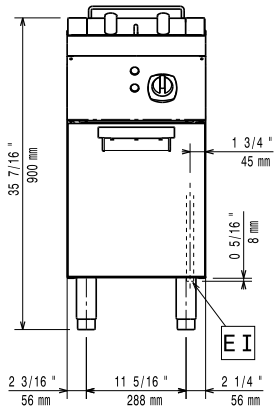

Side

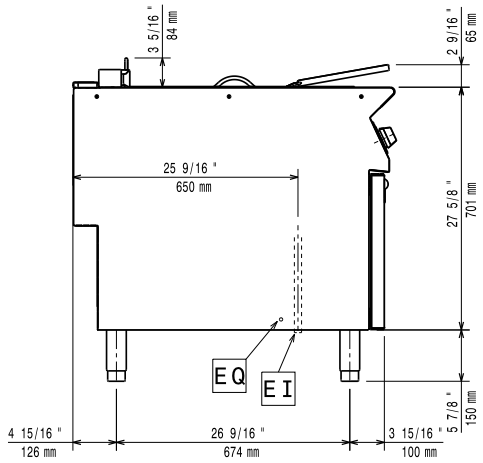

EI = Electrical inlet (power)
EQ = Equipotential screw

Top

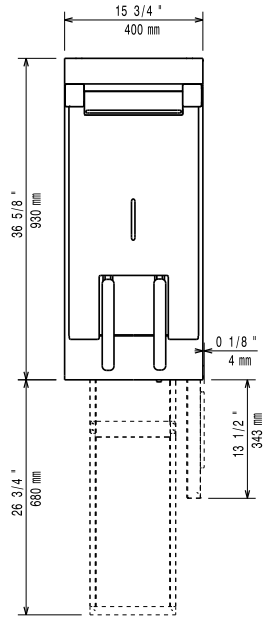

Electric

Supply voltage:	
391094 (E9FRED1HF0)	380-400 V/3N ph/50/60 Hz
391178 (E9FRED1HFN)	230 V/3 ph/50/60 Hz
Total Watts:	16.5 kW

Key Information:

Usable well dimensions (width):	340 mm
Usable well dimensions (height):	290 mm
Usable well dimensions (depth):	400 mm
Well capacity:	18 lt MIN; 20 lt MAX
Thermostat Range:	105 °C MIN; 185 °C MAX
Net weight:	57 kg
Shipping weight:	
391094 (E9FRED1HF0)	60 kg
391178 (E9FRED1HFN)	62 kg
Shipping height:	
391094 (E9FRED1HF0)	1080 mm
391178 (E9FRED1HFN)	1120 mm
Shipping width:	460 mm
Shipping depth:	1020 mm
Shipping volume:	
391094 (E9FRED1HF0)	0.51 m³
391178 (E9FRED1HFN)	0.53 m³
[NOT TRANSLATED]	
391094 (E9FRED1HF0)	EFI9118
391178 (E9FRED1HFN)	N9FE3

If appliance is set up or next to or against temperature sensitive furniture or similar, a safety gap of approximately 150 mm should be maintained or some form of heat insulation fitted.

The company reserves the right to make modifications to the products without prior notice. All information correct at time of printing.

2026.11.20